ITEM NO.	PART NUMBER	DESCRIPTION	QTY.	COMPONENT NOTES
1	50-00030	Connector, dc plug, 2.35x0.7xL20.8 mm, EIAJ-1, molding style, spring contacts	1	
2	30-00404	Wire, 2C TS, 24 AWG, UL2468, 300V, 80C, 3.0 mm, VW-1, PVC, 87A	1	
3	24-00002	Overmold, PVC	1	black

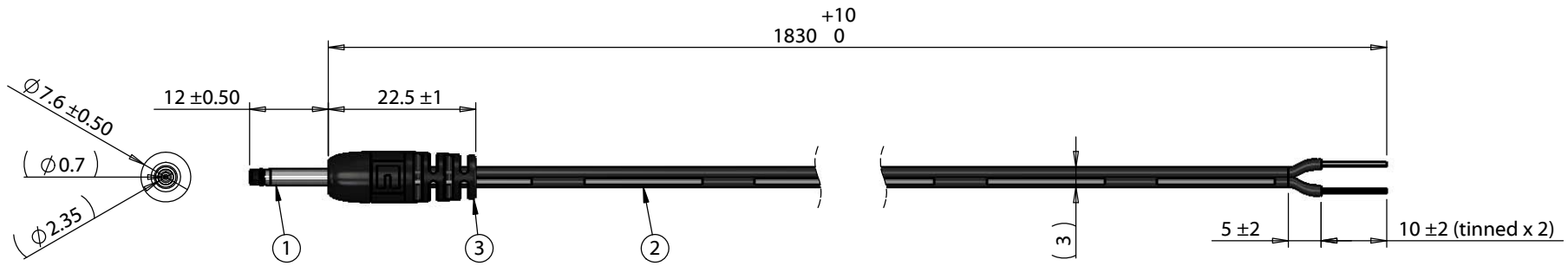

Wiring Diagram	
50-00030	wire color
center	black with stripe
sleeve	black

Notes:
Functionally equivalent components may be substituted

Revision:	Date:	Description:
A	01/31/2018	Initial release

Prepared: GL Digitally signed by GL Date: 2018.01.31 16:51:06 -08'00'

Verified: JP Digitally signed by JP Date: 2018.02.13 13:47:41 -08'00'

Dimensions are in millimeters.
Tolerances:
X: ± 0.5 mm
X.X: ± 0.3 mm
X.XX: ± 0.05 mm

Notes:

RoHS and REACH compliant

Function test: no open, no short circuit, no intermittent

Description:

Cable, 1830 mm, 2.35x0.7x12 mm 50-00030 dc plug to 10 mm tinned, 24 AWG, UL2468, 30-00404 wire

TENSILITY
tel 1.541.323.3228 800 877.670.7118
fax 1.541.323.4202 web tensility.com

Size: A
Part number: 10-02486
Scale: 1:1
Sheet 1 of 1

5 4 3 2 1

To see a custom version of this cable assembly, call Tensility at 541-323-3228 or email engineering@tensility.com